| VER. | AMENDMENT | AUTHORISED BY | DATE |
|---|---|---|---|
| | | | |

**66 (R.O.W.)**
P 3389
( R.O.W. Coloured Brown on P 3389)

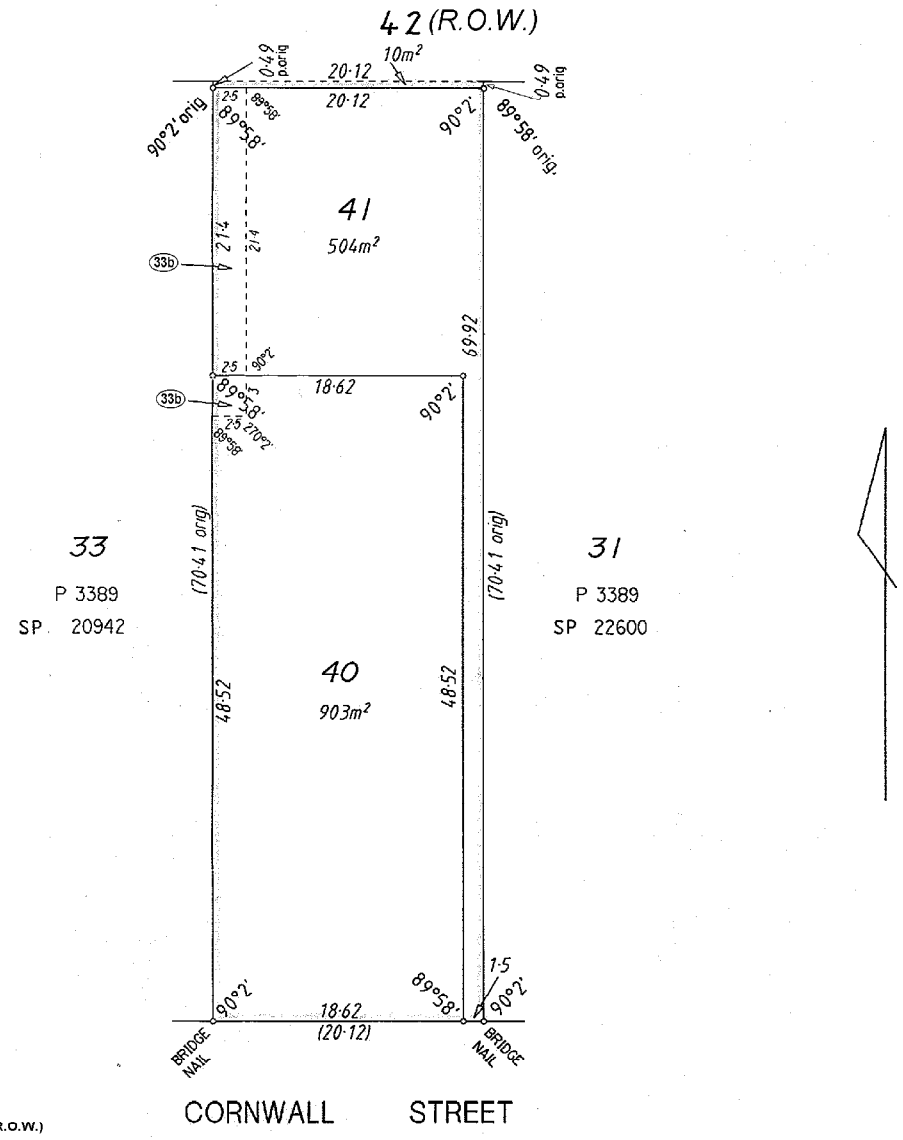


## INTERESTS AND NOTIFICATIONS

| SUBJECT | PURPOSE | STATUTORY REFERENCE | ORIGIN | LAND BURDENED | BENEFIT TO | COMMENTS |
|---|---|---|---|---|---|---|
| | | | | | | |
| 33b | EASEMENT (SEWERAGE) | SECTION 167 OF THE P & D ACT REG 33(b) | THIS PLAN | LOTS 40 & 41 | WATER CORPORATION | |
| LOT 42 | RIGHT OF WAY (R.O.W.) | VESTS IN THE CROWN UNDER SEC 152 OF THE P & D ACT | THIS PLAN | | | |

TYPE FREEHOLD

PURPOSE SUBDIVISION

PLAN OF

LOTS 40, 41 & 42
AND EASEMENTS

SSA YES/NO

DISTRICT SWAN FILE

TOWNSITE

LOCAL AUTHORITY TOWN OF CLAREMONT

LOCALITY SWANBOURNE

| FORMER TENURE | ON | FIELD BOOK |
|---|---|---|
| LOT 32 ON P 3389<br>CT 1762 / 712 | INDEX BG 34(2) 08.22 | 91821 |

SCALE: 1 : 400 @ A3
ALL DISTANCE ARE IN METRES
0 5 10 20 30 40

SURVEYOR'S CERTIFICATE - REG 54

I.....
hereby certify that this plan is accurate and is a correct representatation of the-
(a) *survey and/or
(b) *calculations from measurements,
[*delete if applicable]
undertaken for the purpose of this plan and that it complies with the relevant written law(s) in relation to which it is lodged.

Licensed Surveyor Date

SURVEYOR'S CERTIFICATE - Compiled

I.....
hereby certify that this compiled plan
(a) is a correct and accurate representation of the survey(s) of the subject land, and
(b) is in accordance with the relevant written law in relation to which it is lodged.

Licensed Surveyor Date

LODGED
DATE
FEE PAID
ASSESS No.

TYPE OF VALIDATION
FULL AUDIT
LEGAL COMPONENT
DOCKET
CERTIFIED CORRECT
I.S.C.
F.S.C.

SURVEY FIRM

APPROVED BY
WESTERN AUSTRALIAN PLANNING COMMISSION
FILE 123022
Delegated Under S. 16 P & D Act 2005
DATE

IN ORDER FOR DEALINGS
SUBJECT TO

FOR INSPECTOR OF PLANS & SURVEYS AUTHORIZED LAND OFFICER DATE

APPROVED

INSPECTOR OF PLANS & SURVEYS AUTHORIZED LAND OFFICER DATE

Landgate
Western Australian Land Information Authority

DEPOSITED PLAN

EXAMPLE 94

SHEET 1 OF 1
VERSION 1